LAMINATED DOCK BUMPERS - 1018-6

APPROX WEIGHT: 40.09 lbs.
DOES NOT INCLUDE WEIGHT OF POWER OR PACKAGING!!!

ANY ADDITIONS, DELETIONS, OR OMISSIONS MUST BE CORRECTED ON THIS DRAWING AS THIS DRAWING WILL BE CONSIDERED ALL INCLUSIVE

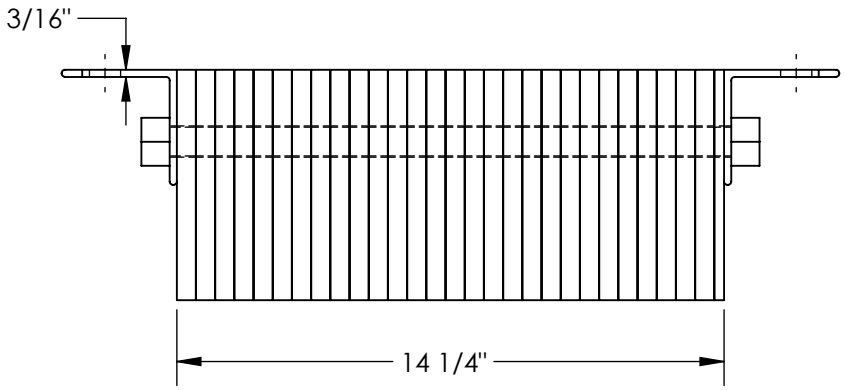

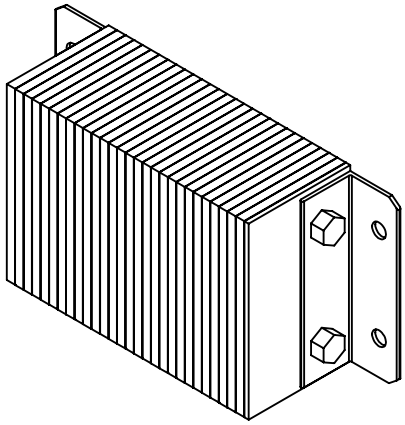

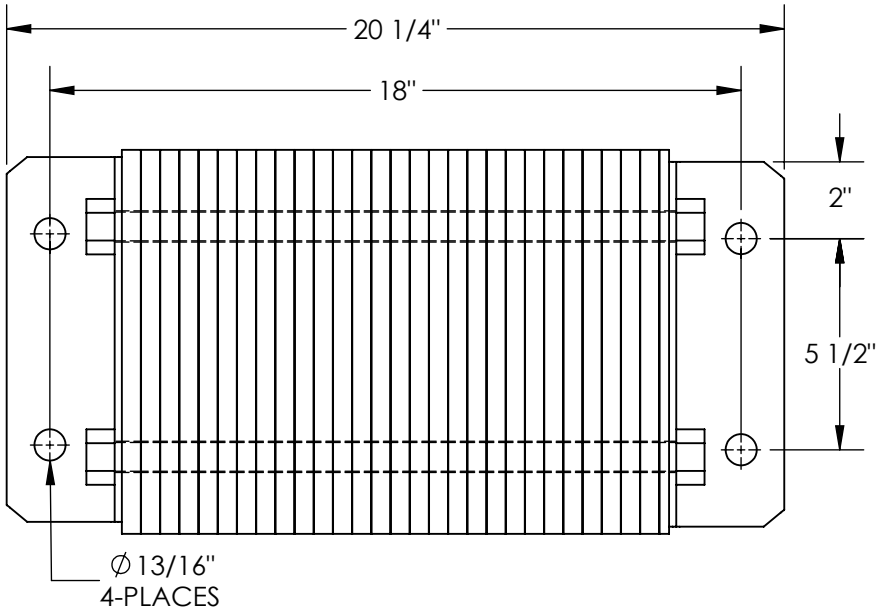

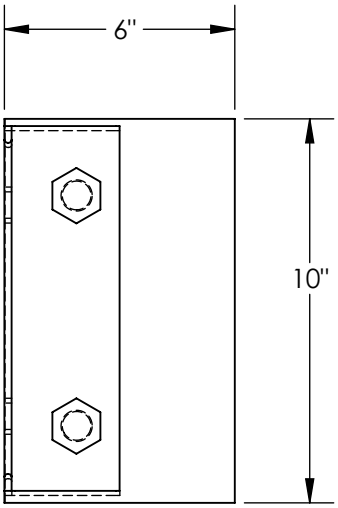

ALL GRAPHICS PROVIDED ARE FOR REFERENCE ONLY. IF CERTAIN DIMENSIONS ARE CRITICAL PLEASE VERIFY THOSE DIMENSIONS WITH YOUR SALESPERSON

DIMENSION TOLERANCE ± 1/2"

STANDARD FEATURES

MODEL NUMBER IS 1018-6
OVERALL WIDTH IS 20 1/4"
OVERALL DEPTH IS 6"
OVERALL HEIGHT IS 10"

SPECIAL FEATURES

NONE

APPROVAL

I, THE UNDERSIGNED, AGREE THAT THE PRODUCT AS REPRESENTED SATISFIES DESIGN AND DIMENSION REQUIREMENTS. I ALSO ACKNOWLEDGE MY DUTY TO CONFIRM PRODUCT AND INSTALLATION COMPLIANCE WITH ALL APPLICABLE FEDERAL, STATE AND LOCAL REGULATIONS AND STANDARDS.

UNITS REQUIRING APPROVAL DRAWINGS OR MODIFIED ARE NON-RETURNABLE

[ ] As drawn [ ] As marked

Signed:_____ Date:_____

Printed Name:_____

LEAD TIME WILL START UPON RECEIPT OF SIGNED APPROVAL DRAWING

DISTRIBUTOR'S NAME: VESTIL MANUFACTURING		P.O.# X
		W.O.# X
DRAWN BY: B.HORN	DATE: 3/18/15	SALES: X
REFERENCE: X	SCALE: 1:5	FILE NAME: 29-007-270
QUOTED LEAD TIME: X	QUOTE # X	