# LAMINATED DOCK BUMPERS- 1036-6

APPROX WEIGHT: 82.15 lbs.
*DOES NOT INCLUDE WEIGHT OF POWER OR PACKAGING!!!*

***ANY ADDITIONS, DELETIONS, OR OMISSIONS MUST BE CORRECTED ON THIS DRAWING AS THIS DRAWING WILL BE CONSIDERED ALL INCLUSIVE***

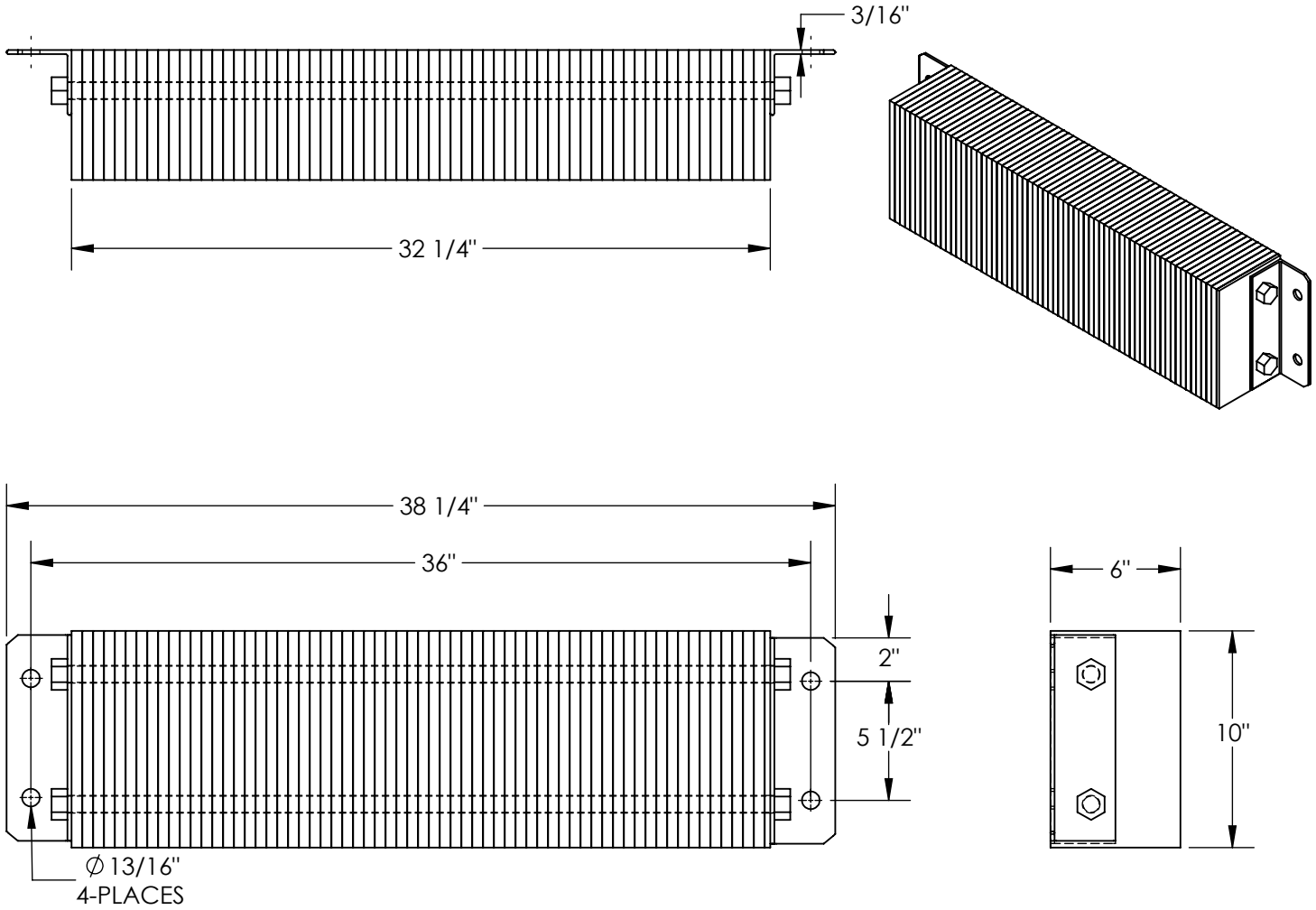


ALL GRAPHICS PROVIDED ARE FOR REFERENCE ONLY. IF CERTAIN DIMENSIONS ARE CRITICAL PLEASE VERIFY THOSE DIMENSIONS WITH YOUR SALESPERSON

DIMENSION TOLERANCE ± 1/2"

## STANDARD FEATURES

MODEL NUMBER IS 1036-6
OVERALL WIDTH IS 38 1/4"
OVERALL DEPTH IS 6"
OVERALL HEIGHT IS 10"

## SPECIAL FEATURES

NONE

**APPROVAL**

I, THE UNDERSIGNED, AGREE THAT THE PRODUCT AS REPRESENTED SATISFIES DESIGN AND DIMENSION REQUIREMENTS. I ALSO ACKNOWLEDGE MY DUTY TO CONFIRM PRODUCT AND INSTALLATION COMPLIANCE WITH ALL APPLICABLE FEDERAL, STATE AND LOCAL REGULATIONS AND STANDARDS.

**UNITS REQUIRING APPROVAL DRAWINGS OR MODIFIED ARE NON-RETURNABLE**

[ ] As drawn [ ] As marked

Signed:_____ Date:_____

Printed Name:_____

*LEAD TIME WILL START UPON RECEIPT OF SIGNED APPROVAL DRAWING*

| | | |
|---|---|---|
| DISTRIBUTOR'S NAME: VESTIL MANUFACTURING | | P.O.# X |
| | | W.O.# X |
| DRAWN BY: B.HORN | DATE: 3/18/15 | SALES: X |
| REFERENCE: X | SCALE: 1:8 | FILE NAME: 29-007-273 |
| QUOTED LEAD TIME: X | QUOTE # X | |